Summary of Technical Run-2000

W.-D.Cwienk, E.Kladiva, L.Kurchaninov,
P.Schacht, P.Stavina, P.Strizenec

- Measurements done
- Calibration chain results
- Signal chain results
- Calibration constant
- Chain model-2000

Measurements Done

- Technical run was at CERN 21.02 – 04.03.2000
- One front module was equipped completely (cables, harnesses, PSB, FEB, ADC) and istalled in the cryostat
- The aim was to measure calibration signals through the chain in order to adjust the model.
- All measurements were done by oscilloscope in points, shown on the scheme
- In total 1808 ASCII files were written. Each file contains waveform of 1000 1-ns samples (in mV) Files *wavennnn.dat* are located in *atlhp-h6 in /data/calib_techrun/*
- Three groups of oscilloscope measurements:
  - Calibration cables (points A, B, C)
  - Strip lines (point D)
  - Signal chain (points E, F, G, H, I)
- Data were analyzed at MPI. Each part of the chain is described by model functions to be implemented to PSpice
- Xtalk runs by ADC readout. Analysis is still in progress and not presented here

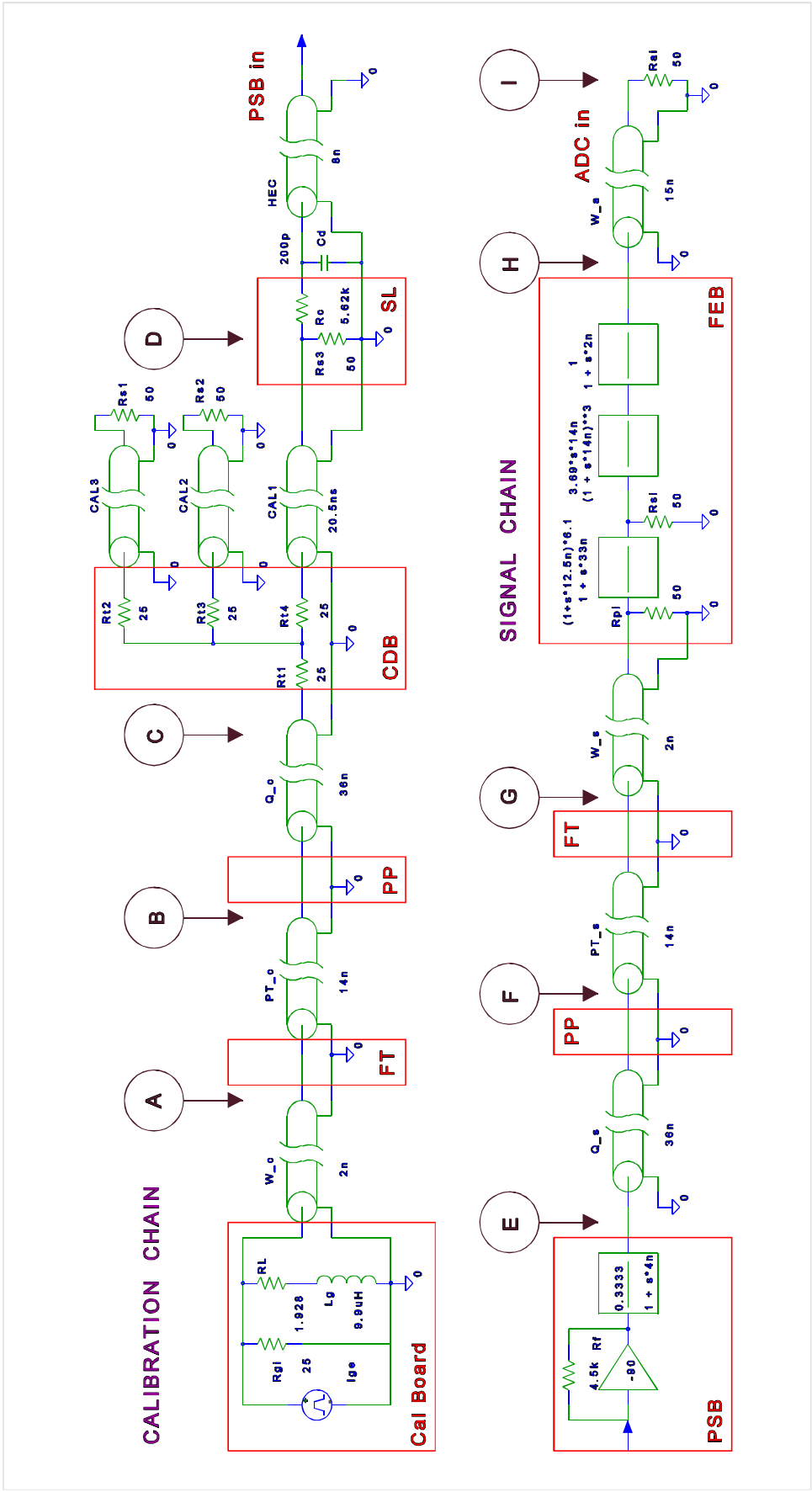
CALIBRATION CHAIN
Cal Board
Rgl
25
Ige
RL
1.928
Lg
9.9uH
W_o
2n
A
FT
PT_o
14n
B
PP
Q_o
36n
C
CDB
Rt1
25
Rt2
25
Rt3
25
Rt4
25
CAL1
20.5ns
CAL2
CAL3
Rs1
50
Rs2
50
D
SL
Rs3
50
Rc
5.62k
200p
Cd
HEC
8n
PSB in
E
PSB
4.5k
Rf
-80
0.3333
1 + s*4n
Q_s
36n
F
PP
PT_s
14n
G
FT
W_s
2n
SIGNAL CHAIN
Rpl
50
(1+s*12.5n)*6.1
1 + s*33n
Rsl
50
3.69*s*14n
(1 + s*14n)**3
1
1 + s*2n
H
FEB
W_a
15n
I
ADC in
Ral
50

Calibration Chain Results

1. Calibration generator
   It was found that the generator pulse parameters depend on the termination conditions. So, they are different at different points and temperatures. This effect was understood and described.

2. Calibration cables
   It was found that the signal is not described by the parameters presented in HEC-Note-066. This is because the generator does not have 50 Ω impedance. We made additional measurements in lab at room temperature and in LN_2. Warm data are consistent with TR data. LN_2 data are used to recalculate the cable parameters to LAr.

3. Calibration distribution board (CDB)
   Direct measurements were not done because the output connector was not accessible. Analysis shows that there is no big shape distortion by the CDB. Some attenuation (up to 3% in warm) can be expected. Additional measurements will be done at MPI.

4. Strip lines (SL)
   Have never been measured before. TR data show that the shape is not distorted by SL, there is only attenuation and delay. Parameters in cold are not known. SL will be measured at MPI.

- Parameters of the calibration chain are summarized in the table

Calibration Chain Parameters

- All parameters differ from those of Chain Model-99

Part	Parameter	Model 1999 warm	Model 2000 warm	Model 1999 cold	Model 2000 cold
Calib Gen.	Ug, *μV* Tc, *ns* α,*%*	37.0 370 7.2	37.4±0.2 352±4 7.44±0.26	-- -- --	-- -- --
Calib Cables	Ig, *na/dac* Tc, *ns* α,*%* ac τz, *ns* τo, *ns* τp, *ns*	1.66 370 7.2 0.886 17.73 3.81 25.40	1.99 322 6.72 0.937 14.59 3.02 21.83	1.66 370 7.7 0.970 32.55 1.85 39.44	2.15 347 7.27 0.974 21.88 2.76 26.74
CDB	attenuation splitting	1 1/3	0.973** 1/3**	1 1/3	0.993** 1/3**
SL	attenuation del., ns/SL	1 1.44	0.6%/SL 1.28±0.06	1 1.42	0.15%** ???**

- ** means that additional measurements are needed
- Red text: changes in model. All parameters in Model-2000 will be new

Signal Chain Results

1. PSB
   Parameters are in agreement with MPI functional and QC tests.
2. Signal cables
   Well described by the old parameterization (HEC-Note-066). Small difference is found in the attenuation. Can be due to the oscilloscope measurement accuracy.
3. FEB
   Was measured in details in 1999 at MPI. TR data are in agreement, except of zero time constant of the preshaper. This can be due to the analysis procedure was simplified (two parameters was fixed).
4. ADC cable
   Never measured before. It is found that it is described by one pole function with time constant of 8 ns.
5. ADC
   Conversion constant 1 mV/count is confirmed. Some unaccuracy comes from the different conditions of oscilloscope and ADC measurements. These measurements will be done again for all ADC channels during the first beam period -2000.

- Signal chain parameters are summarized in the table

Signal Chain Parameters

- On the basis of TR-2000 and lab measurements in 1999, the signal chain parameters are:

Part	Parameter	Model 1999 warm	Model 2000 warm	Model 1999 cold	Model 2000 cold
PSB	Rp, *KΩ* Rin, Ω τdr, *ns*	0.68 70 4	0.68* 70* 4	0.75 50 4	0.75* 50 4
Signal Cables	ac τz, *ns* τo, *ns* τp, *ns*	0.924 16.74 2.43 21.64	0.948 16.18 1.64 19.48	0.981 29.97 1.18 34.36	0.987 28.48 0.80 31.45
FEB	Gain τi τs τdr	62.4 30 13.5 5	62.4 30 13.5 5	-- -- -- --	-- -- -- --
ADC cable	Attenuation τac del., ns	1 0 ---	1 8 10	-- -- --	-- -- --
ADC	Conv., mV/adc	1.0	1.0**	--	--

* Parameter will be revised on the basis of last QC tests

** To be measured more precisely

- Red text: changes in model.

Model-2000

- PSpice model like in 1999 with new parameters.
- The goal of the model is to produce reference signals (calibration in warm, calibration in cold, particles) for module acceptance tests. It is useful to study the requirements to different components (uniformity, reflections, etc.) and to localize possible problems.
- Release-1 - May 2000
  Reference shapes will be produced and compared with data-99 and first data-2000.
- Release-2 -July 2000
  After the lab measurements of CDB and SL they will be described more precisely.
- Release-3 -End of year ?
  Xtalk leakage and detector impedance will be included.
- Not clear now:
  - How to describe correctly both reflections and distortions in cold cables (no proper parts in PSpice)
  - How to describe complex impedance (for Xtalk and detector capacitance)

Calibration constant

- nA-2000: 2.15 nA/DAC (was 1.66 in 1999)
- From 1999 data the LAr yield was 6.0 nA/MeV, so now it is 7.77 nA/MeV. Still some uncertainty +0% -3% due to CDB
- For comparison:

  TDR: Ip = 8.3 nA/MeV

  Particle Data (ε = 23.6 eV/pair, 3.8 mm/μs):
  Tdr = 520 ns
  Ip = 6.51 nA/MeV

  HEC conditions (gap=1973μm, Tdr=440ns, with classical ε=23.6 eV/pair):
  Ip = 7.70 nA/MeV