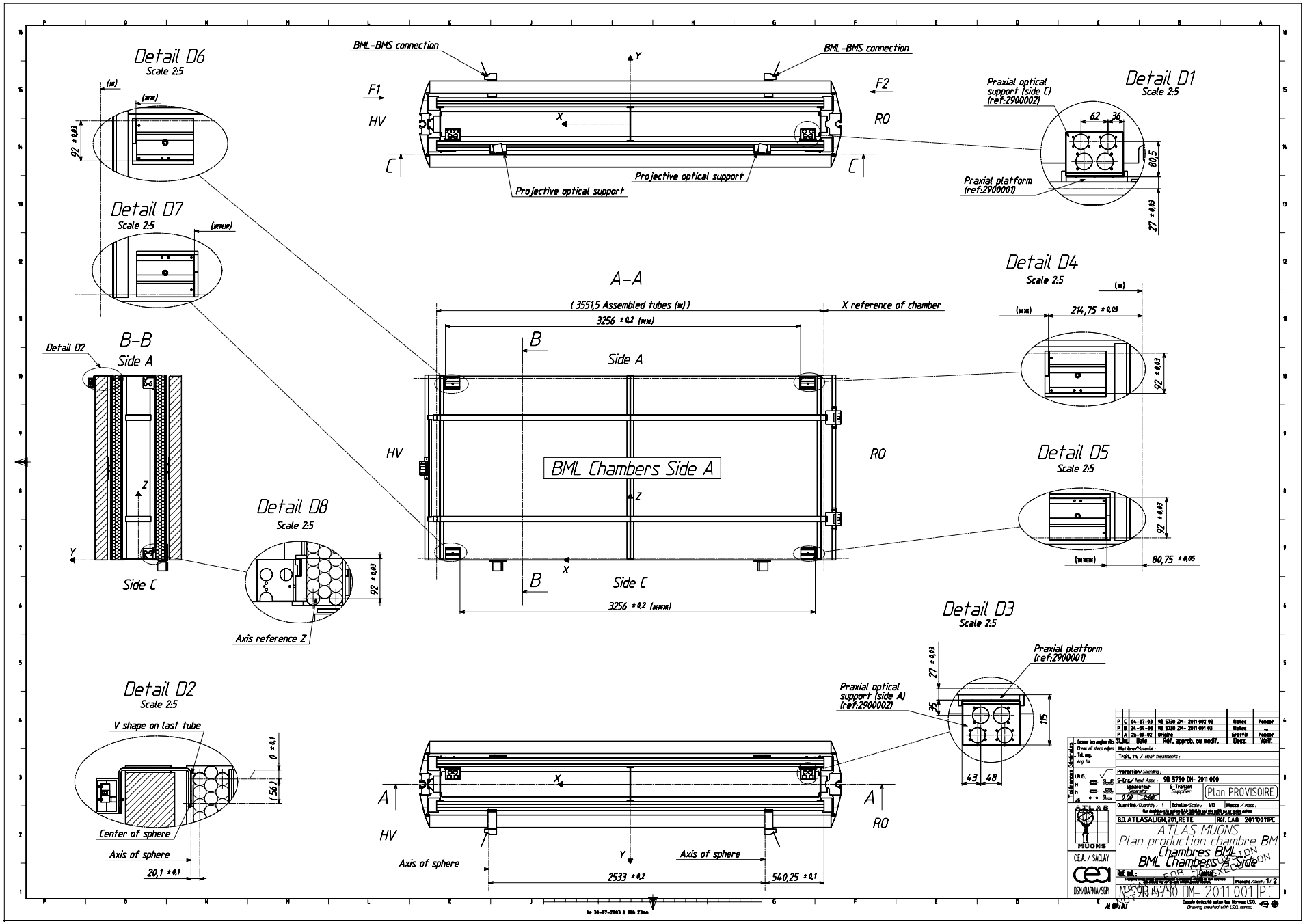

Detail D6
Scale 2:5
(*)
(**)
92 ±0,03
Detail D7
Scale 2:5
(***)
B-B
Side A
Detail D2
Side C
Detail D8
Scale 2:5
Axis reference Z
92 ±0,03
BML-BMS connection
BML-BMS connection
F1
F2
HV
RO
C
C
Projective optical support
Projective optical support
Detail D1
Scale 2:5
Praxial optical support (side C) (ref:2900002)
62
36
80,5
Praxial platform (ref:2900001)
27 ±0,03
A-A
(3551,5 Assembled tubes (*))
X reference of chamber
3256 ±0,2 (**)
B
Side A
HV
RO
BML Chambers Side A
Side C
3256 ±0,2 (***)
Detail D4
Scale 2:5
(*)
(**)
214,75 ±0,05
92 ±0,03
Detail D5
Scale 2:5
92 ±0,03
(***)
80,75 ±0,05
Detail D3
Scale 2:5
Praxial platform (ref:2900001)
Praxial optical support (side A) (ref:2900002)
27 ±0,03
35
115
43
48
Detail D2
Scale 2:5
V shape on last tube
0 ±0,1
(56)
Center of sphere
Axis of sphere
20,1 ±0,1
A
A
HV
RO
Axis of sphere
Axis of sphere
2533 ±0,2
540,25 ±0,1
P C 04-07-03 9B 5730 ZM- 2011 002 03 Retec Penget
P B 24-04-05 9B 5730 ZM- 2011 001 03 Retec
P A 26-09-02 Origine Graffin Penget
Sl.Ind. Date Réf. approb. ou modif. Dess. Vérif.
Matière/Material :
Traît. th. / Heat treatments :
Protection/Shielding :
S-Ens./ Next Assy. : 9B 5730 DM- 2011 000
Séparateur Separator 0,00 0,00
S-Traitant Supplier
Plan PROVISOIRE
Quantité/Quantity : 1 Echelle/Scale : 1:10 Masse / Mass :
B.D. ATLASALIGN,201,RETE Réf. C.A.O. 2011001PC
ATLAS MUONS
Plan production chambre BM
Chambres BML
BML Chambers A Side
Planche/Sheet : 1/2
9B 5730 DM- 2011 001 PC
C.E.A. / SACLAY
DSM/DAPNIA/SEPI
Dessin évécuté selon les Normes I.S.O.
Drawing created with I.S.O. norms.
le 30-07-2003 à 08h 23mn